TERMINALS

Flat Terminal

Cable to FLAT

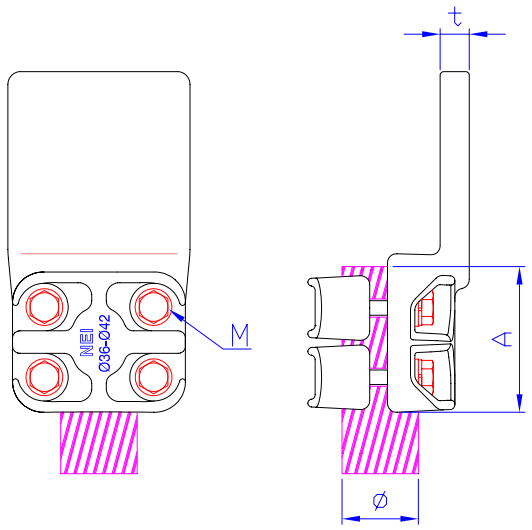

Catalogue Number	Conductor Range(ϕ)	Dimensions		
		A	t	M
FT1-19-CD-Nd-EF	12-19	77	16	10
FT1-27-CD-Nd-EF	19-27	77	16	10
FT1-33-CD-Nd-EF	26-33	77	16	10
FT1-42-CD-Nd-EF	36-42	77	16	10

TERMINALS

Flat Terminal

Tube to FLAT

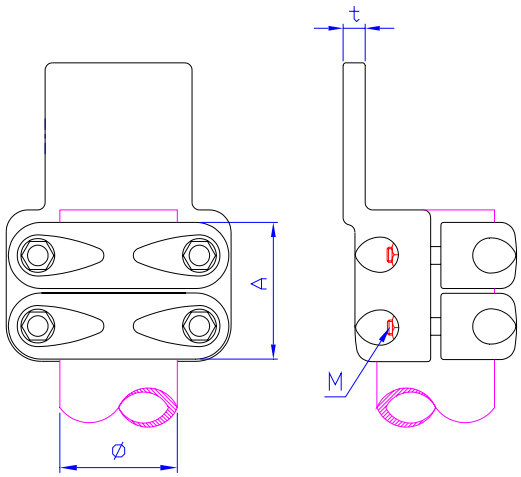

Catalogue Number	Tube Size(ϕ)	Dimensions		
		A	t	M
FT1-50-CD-Nd-EF	50	93	20	12
FT1-60-CD-Nd-EF	60	93	20	12
FT1-80-CD-Nd-EF	80	93	20	12
FT1-10-CD-Nd-EF	100	93	20	12
FT1-12-CD-Nd-EF	120	93	20	12
FT1-16-CD-Nd-EF	160	103	20	12
FT1-20-CD-Nd-EF	200	127	20	14
FT1-25-CD-Nd-EF	250	127	20	14

TERMINALS

Side Terminal

Side Terminal

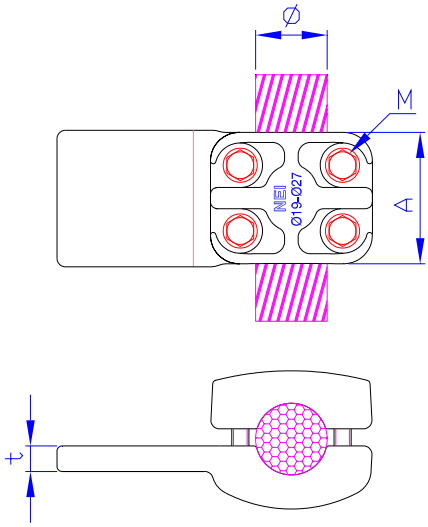

Catalogue Number	Conductor Range(ϕ)	Dimensions		
		A	t	M
ST1-19-CD-Nd-EF	12-19	77	16	10
ST1-27-CD-Nd-EF	19-27	77	16	10
ST1-33-CD-Nd-EF	26-33	77	16	10
ST1-42-CD-Nd-EF	36-42	77	16	10

TERMINALS

Side Terminal

Tube to Flat

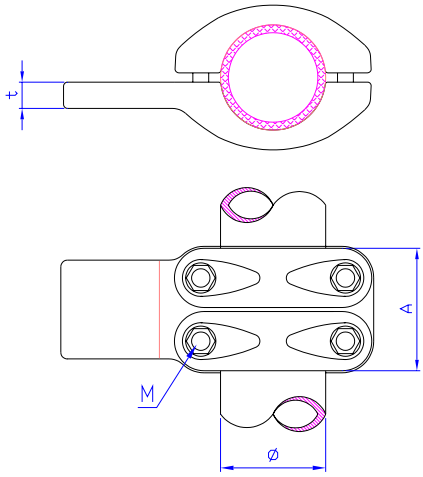

Catalogue Number	Tube Size(ϕ)	Dimensions		
		A	t	M
ST-50-CD-Nd-EF	50	93	20	12
ST-60-CD-Nd-EF	60	93	20	12
ST-80-CD-Nd-EF	80	93	20	12
ST-10-CD-Nd-EF	100	93	20	12
ST-12-CD-Nd-EF	120	93	20	12
ST-16-CD-Nd-EF	160	103	20	12
ST-20-CD-Nd-EF	200	127	20	14
ST-25-CD-Nd-EF	250	127	20	14

TERMINALS

Vertical Terminal

Cable to Flat

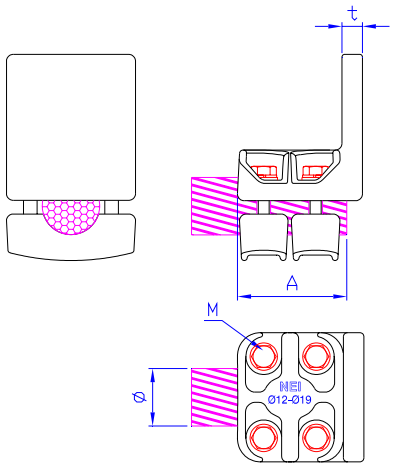

Catalogue Number	Conductor Range(ϕ)	Dimensions		
		A	t	M
VT-19-CD-Nd-EF	12-19	77	16	10
VT-27-CD-Nd-EF	19-27	77	16	10
VT-33-CD-Nd-EF	26-33	77	16	10
VT-42-CD-Nd-EF	36-42	77	16	10

TERMINALS

Vertical Terminal

Tube to FLAT

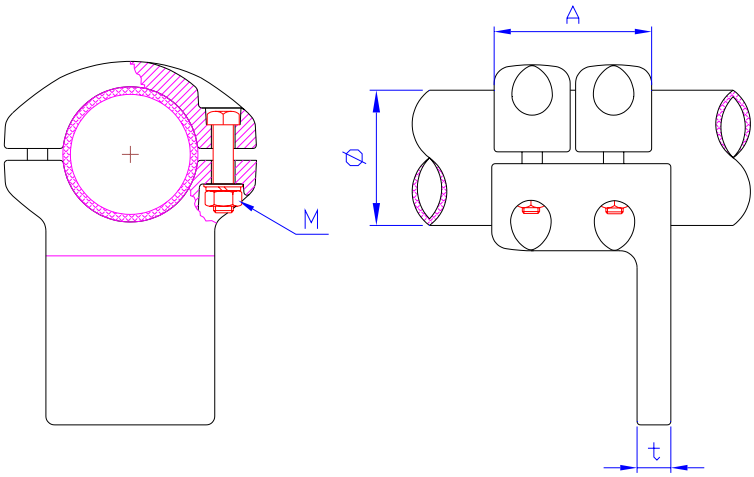

Catalogue Number	Tube Size(ϕ)	Dimensions		
		A	t	M
VT-50-CD-Nd-EF	50	93	20	12
VT-60-CD-Nd-EF	60	93	20	12
VT-80-CD-Nd-EF	80	93	20	12
VT-10-CD-Nd-EF	100	93	20	12
VT-12-CD-Nd-EF	120	93	20	12
VT-16-CD-Nd-EF	160	103	20	12
VT-20-CD-Nd-EF	200	127	20	14
VT-25-CD-Nd-EF	250	127	20	14

TERMINALS

Double Flat Terminal

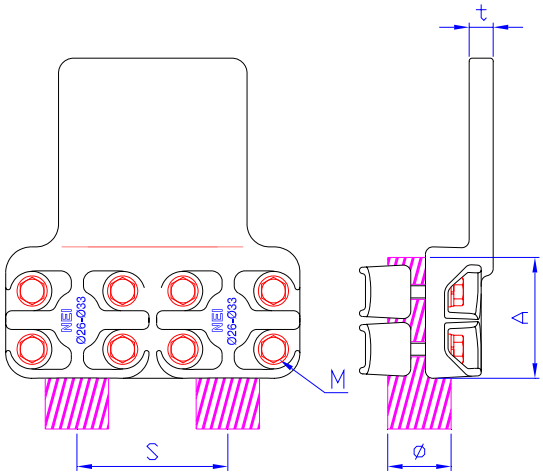

Catalogue Number	Fig. No.	Conductor Range (mm)	Dimensions (mm)			
		(ϕ)	S	A	T	M
DFT11-19-CD-Nd-EF	1	12-19	100	77	16	10
DFT12-19-CD-Nd-EF	2		200			
DFT11-27-CD-Nd-EF	1	19-27	100	77	16	10
DFT12-27-CD-Nd-EF	2		200			
DFT11-33-CD-Nd-EF	1	26-33	100	77	16	10
DFT12-33-CD-Nd-EF	2		200			
DFT11-42-CD-Nd-EF	1	36-42	100	77	16	10
DFT12-42-CD-Nd-EF	2		200			

TERMINALS

Double Vertical Terminal

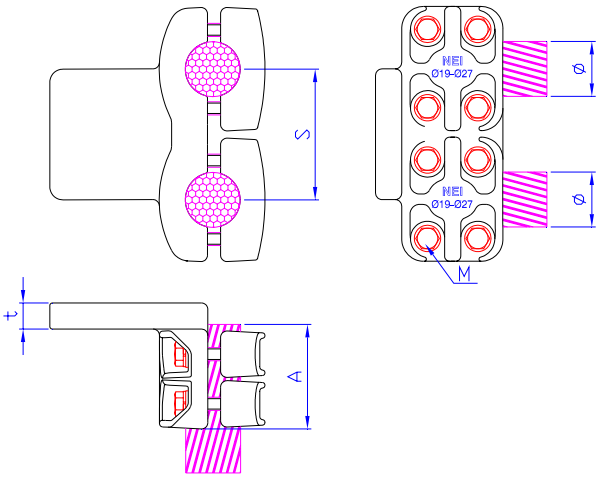

Catalogue Number	Fig. No.	Conductor Range (mm)	Dimensions (mm)			
		(ϕ)	S	A	T	M
DVT11-19-CD-Nd-EF	1	12-19	100	77	16	10
DVT12-19-CD-Nd-EF	2		200			
DVT11-27-CD-Nd-EF	1	19-27	100	77	16	10
DVT12-27-CD-Nd-EF	2		200			
DVT11-33-CD-Nd-EF	1	26-33	100	77	16	10
DVT12-33-CD-Nd-EF	2		200			
DVT11-42-CD-Nd-EF	1	36-42	100	77	16	10
DVT12-42-CD-Nd-EF	2		200			

TERMINALS

Double Vertical Side Terminal

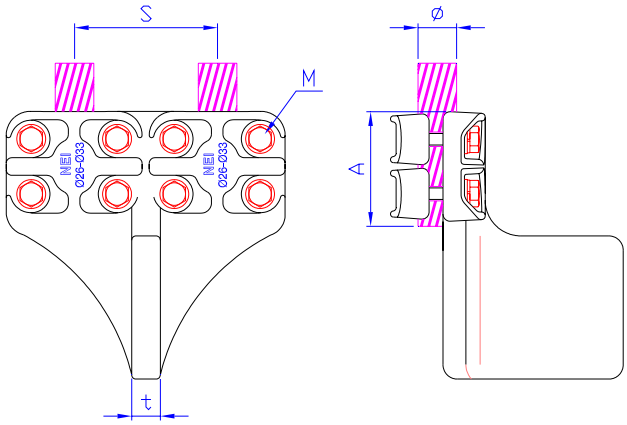

Catalogue Number	Fig. No.	Conductor Range (mm)	Dimensions (mm)			
		(ϕ)	S	A	T	M
DVST11-19-CD-Nd-EF	1	12-19	100	77	16	10
DVST12-19-CD-Nd-EF	2		200			
DVST11-27-CD-Nd-EF	1	19-27	100	77	16	10
DVST12-27-CD-Nd-EF	2		200			
DVST11-33-CD-Nd-EF	1	26-33	100	77	16	10
DVST12-33-CD-Nd-EF	2		200			
DVST11-42-CD-Nd-EF	1	36-42	100	77	16	10
DVST12-42-CD-Nd-EF	2		200			

TERMINALS

Selection of Pads

C & D: Dimensions of Pad
N: Number of holes
d: Diameter of holes
E & F: Distances between holes

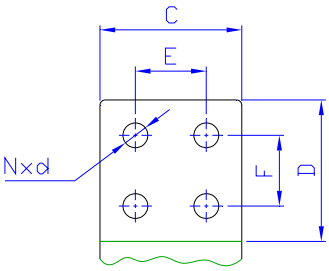

Example:

Voltage: 132 kV
2 Cable 29.1 mm diameter to Flat
Cable distance: 100mm
Pad size: 200×100mm
8×14.5mm holes with 40mm distances

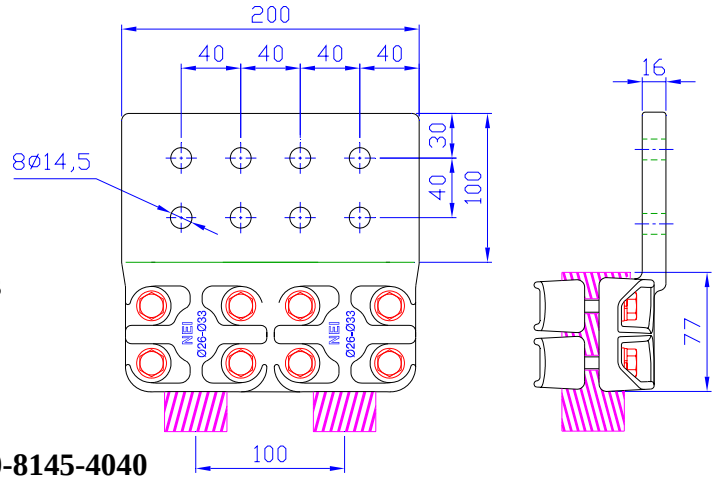

Catalogue number: **DFT11-33-200100-8145-4040**